AIRPORT SPONSOR STRATEGIC EVENT SUBMISSION FORM

Submit this form preferably 45 days prior to the event to the Federal Aviation Administration, Air Traffic Organization, Planning and Requirements, Eastern/Central/Western Service Area

Please email form to: 9-AJV-SEC-ESA@faa.gov (Eastern Service Area)
9-AJV-SEC-CSA@faa.gov (Central Service Area)
9-AJV-SEC-WSA@faa.gov (Western Service Area)

AIRPORT NAME Coolidge Municipal Airport **LOCATION ID** P08

CITY, STATE Coolidge, Arizona

Referenced **NRA NUMBER** 2019-AWP-3182-NRA

PROJECT SCOPE (Example: Reconstruct Runway 18/36)

Reconstruct Runway 5-23 with Electrical Upgrades

PROJECT PHASE (Example: Phase 1 of 3) Phase 1 of 2

EVENT (Example: Runway 18/36 closure) Runway 17-35 & Runway 5-23 Closure

Duration: Start Date 12/12/2019 End Date 02/03/2020

Hours: 24 hrs a day ☑ or from _____ to _____ daily.

Other hours of Operations Specify _____

FACILITIES IMPACTED

Are any facilities impacted? Yes ☑ No ☐ If yes, list impacted facilities below along with the duration of the impacts if different than duration of the event (these facilities may be found on the Non Rulemaking Action (NRA) determination letter).

Facility Runway 5 PAPI (Example: RWY 18 localizer) Start Date _____ End date _____ Hours: Start/End Time _____	Facility _____ Start Date _____ End date _____ Hours: Start/End Time _____
Facility Runway 23 PAPI Start Date _____ End date _____ Hours: Start/End Time _____	Facility _____ Start Date _____ End date _____ Hours: Start/End Time _____
Facility _____ Start Date _____ End date _____ Hours: Start/End Time _____	Facility _____ Start Date _____ End date _____ Hours: Start/End Time _____

Submitted by Sponsor Representative:
Print Name James Myers
Title Airport Manager
Signature James Myers Date 10/23/19

FAA Form 6000-26 (08/13)

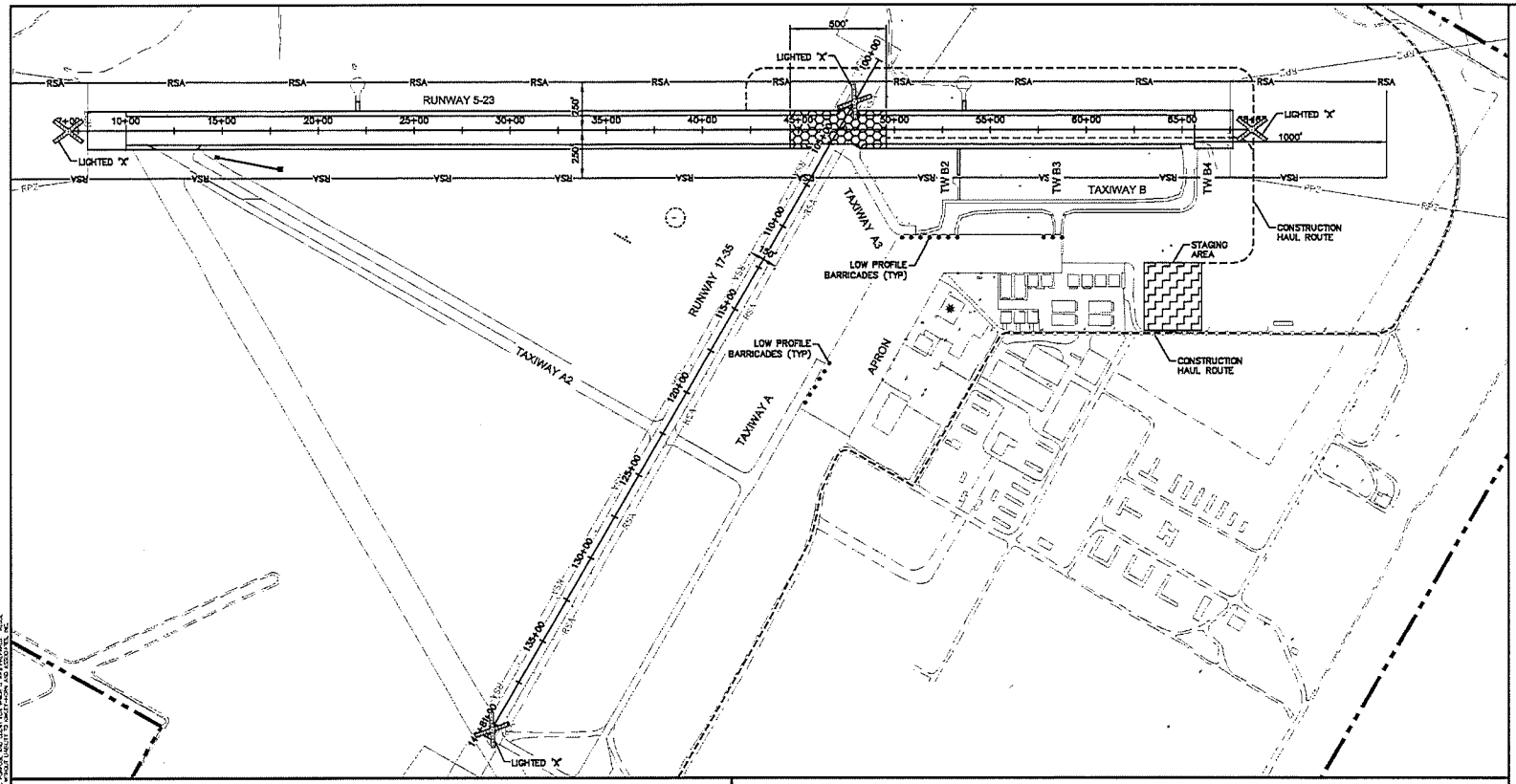

LEGEND

- PHASE 1
- PHASE 2
- STAGING AREA
- STOCKPILE LOCATION
- LIGHTED X (TO BE PROVIDED/ MAINTAINED BY CONTRACTOR)
- LOW PROFILE BARRICADES (TO BE PROVIDED/MAINTAINED BY CONTRACTOR)
- C-23 SHERPA
- FLAGGER (TO BE SUPPLIED BY CONTRACTOR)
- AIRCRAFT TRAFFIC ROUTE DURING CONSTRUCTION
- RSA — RUNWAY SAFETY AREA
- HAUL ROUTE/SITE ACCESS

PHASING NOTES:

PHASE 1 DURATION: 30 DAYS

GENERAL NOTES:

1. THE CONTRACTOR SHALL NOT START WORK UNTIL A N.T.P. HAS BEEN ISSUED BY THE CITY OF COOLIDGE.
2. THE CONTRACTOR SHALL COORDINATE ANY NECESSARY CLOSURES WITH THE AIRPORT, PRIOR TO STARTING WORK.
3. THE CONTRACTOR SHALL VERIFY THE BARRICADES AND LIGHTED X'S FOR EACH PHASE OF THE PROJECT ARE IN THE CORRECT LOCATION, ARE PROPERLY SECURED, AND ARE IN PROPER WORKING ORDER PRIOR TO STARTING WORK EACH DAY/NIGHT OF THE PROJECT.
4. THE CONTRACTOR SHALL NOT STRAY FROM THE HAUL ROUTE / SITE ACCESS DESIGNATED ON THE PROJECT LAYOUT PLAN, SEE SHEET C1.4.

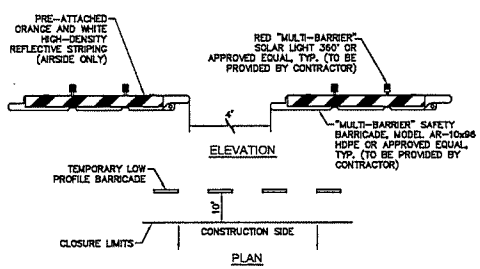

1 C2.1 LOW PROFILE BARRICADE

N.T.S.

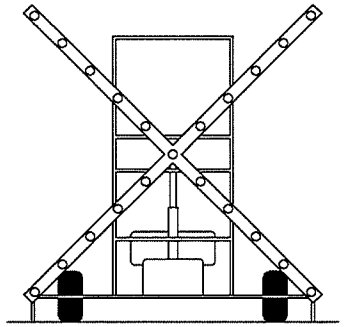

LIGHTED X NOTES

PORTABLE LIGHTED RUNWAY CLOSURE MARKERS (LIGHTED "X") SHALL MEET ALL OF THE FOLLOWING CONDITIONS:

1. WILL BE PROVIDED BY THE CONTRACTOR AND MAINTAINED BY THE CONTRACTOR THROUGHOUT THE DURATION OF THE PROJECT. CONTRACTOR SHALL NOTIFY THE AIRPORT IMMEDIATELY IF ANY DISRUPTION TO THE LIGHTED RUNWAY CLOSURE MARKERS IS NOTICED DURING WORK HOURS.
2. BE CONTROLLED SO THAT THE LIGHTED SIGNAL WILL FLASH AT AN APPROXIMATE RATE OF TWO AND A HALF TO THREE (2.5–3) SECONDS "ON" AND ONE TO TWO AND A HALF (1–2.5) SECONDS "OFF".
3. PROVIDE THE FOLLOWING DAYTIME AND NIGHTTIME VISUAL REFERENCE DURING VISUAL FLIGHT RULE (VFR) CONDITIONS WHEN PLACED ON CENTERLINE PER THE DIMENSIONS SHOWN ON THE PLANS:
   - (A) VISIBLE TO THE PILOT AT A RANGE OF AT LEAST FIVE NAUTICAL MILES.
   - (B) RECOGNIZABLE AS A LETTER "X" FROM A RANGE OF AT LEAST ONE NAUTICAL MILE.
4. INCLUDE AN OPERATIONS PLACARD IN A CONSPICUOUS LOCATION THAT INSTRUCTS OPERATORS TO VISUALLY CHECK THE OPERATION OF THE DEVICE EVERY TWO HOURS.
5. DIMENSIONING AND LIGHTING ARRANGEMENT SHALL FOLLOW THE DESIGN RECOMMENDATION PER FAA AC 150/5345-55A. THE USE OF LED LIGHTS IS STRONGLY ENCOURAGED.

2 C2.1 PORTABLE LIGHTED RUNWAY CLOSURE MARKER

LOCATIONS AS SHOWN ON PLANS

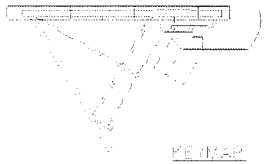

NORTH

GRAPHIC SCALE IN FEET
0 150 300 600

Call 8-1-1 at least two full working days before you begin excavation. ARIZONA 811

NO.	REVISION	DATE

Kimley»Horn

© 2019 KIMLEY-HORN AND ASSOCIATES, INC.

7740 North 16th Street, Suite 300
Phoenix, Arizona 85020 (602) 944-5500

32310 MICHAEL NORDY ARIZONA, USA EXPIRES 06/30/19

SCALE (H): 1"=300'
SCALE (V): N/A
DESIGNED BY: BLR
DRAWN BY: BLR
CHECKED BY: MAH
DATE: 05/03/19

COOLIDGE MUNICIPAL AIRPORT
CITY OF COOLIDGE
GROWTH MANAGEMENT
131 W PINALEST AVE
COOLIDGE, AZ 85228

COOLIDGE MUNICIPAL AIRPORT RECONSTRUCT RUNWAY 5-23 CONSTRUCTION PHASING PLAN PHASE 1

PROJECT NO. 191593007

DRAWING NAME 191593011CS.dwg

C2.1

SHEET NO. 8 OF 86

AIRPORT SPONSOR STRATEGIC EVENT SUBMISSION FORM

Submit this form preferably 45 days prior to the event to the Federal Aviation Administration, Air Traffic Organization, Planning and Requirements, Eastern/Central/Western Service Area

Please email form to: 9-AJV-SEC-ESA@faa.gov (Eastern Service Area)
9-AJV-SEC-CSA@faa.gov (Central Service Area)
9-AJV-SEC-WSA@faa.gov (Western Service Area)

AIRPORT NAME Coolidge Municipal Airport **LOCATION ID** P08

CITY, STATE Coolidge, Arizona

Referenced **NRA NUMBER** 2019-AWP-3182-NRA

PROJECT SCOPE (Example: Reconstruct Runway 18/36)

Reconstruct Runway 5-23 with Electrical Upgrades

PROJECT PHASE (Example: Phase 1 of 3) Phase 2 of 2

EVENT (Example: Runway 18/36 closure) Runway 5-23 Closure

Duration: Start Date 11/22/2019 End Date 05/22/2019

Hours: 24 hrs a day ☑ or from _____ to _____ daily.

Other hours of Operations Specify _____

FACILITIES IMPACTED

Are any facilities impacted? Yes ☑ No ☐ If yes, list impacted facilities below along with the duration of the impacts if different than duration of the event (these facilities may be found on the Non Rulemaking Action (NRA) determination letter).

Facility Runway 5 PAPI (Example: RWY 18 localizer) Start Date _____ End date _____ Hours: Start/End Time _____	Facility _____ Start Date _____ End date _____ Hours: Start/End Time _____
Facility Runway 23 PAPI Start Date _____ End date _____ Hours: Start/End Time _____	Facility _____ Start Date _____ End date _____ Hours: Start/End Time _____
Facility _____ Start Date _____ End date _____ Hours: Start/End Time _____	Facility _____ Start Date _____ End date _____ Hours: Start/End Time _____

Submitted by Sponsor Representative:
Print Name James Myers
Title Airport Manager
Signature James Myers Date 10/23/19

FAA Form 6000-26 (08/13)

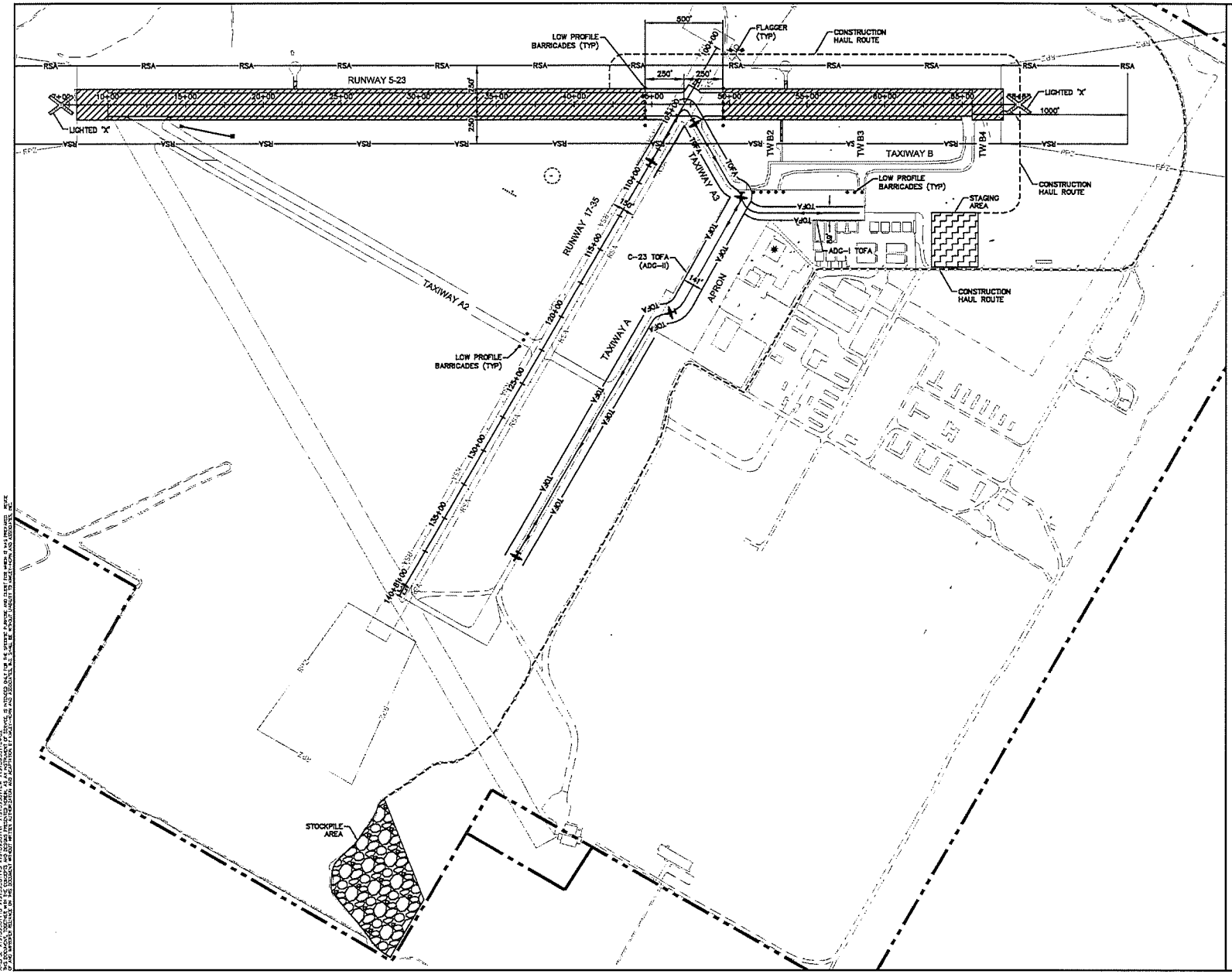

LEGEND

- PHASE 1
- PHASE 2
- STAGING AREA
- STOCKPILE LOCATION
- LIGHTED X (TO BE PROVIDED/ MAINTAINED BY CONTRACTOR)
- LOW PROFILE BARRICADES (TO BE PROVIDED/MAINTAINED BY CONTRACTOR)
- C-23 SHERPA
- FLAGGER (TO BE SUPPLIED BY CONTRACTOR)
- AIRCRAFT TRAFFIC ROUTE DURING CONSTRUCTION
- RSA — RUNWAY SAFETY AREA
- HAUL ROUTE/SITE ACCESS

PHASING NOTES:

PHASE 2 DURATION: 202 DAYS

GENERAL NOTES:

1. THE CONTRACTOR SHALL NOT START WORK UNTIL A N.T.P. HAS BEEN ISSUED BY THE CITY OF COOLIDGE.
2. THE CONTRACTOR SHALL COORDINATE ANY NECESSARY CLOSURES WITH THE AIRPORT, PRIOR TO STARTING WORK.
3. THE CONTRACTOR SHALL VERIFY THE BARRICADES AND LIGHTED X'S FOR EACH PHASE OF THE PROJECT ARE IN THE CORRECT LOCATION, ARE PROPERLY SECURED, AND ARE IN PROPER WORKING ORDER PRIOR TO STARTING WORK EACH DAY/NIGHT OF THE PROJECT.
4. THE CONTRACTOR SHALL NOT STRAY FROM THE HAUL ROUTE / SITE ACCESS DESIGNATED ON THE PROJECT LAYOUT PLAN, SEE SHEET C1.4.

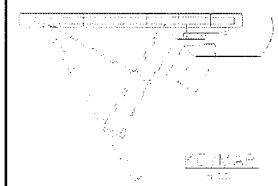

NORTH

GRAPHIC SCALE IN FEET
0 150 300 600

Call ARIZONA 811 before you begin excavating.
Visit Blue Stake, Inc. online at www.azbluestake.com
Dial 8-1-1 or 1-800-STAKE-IT (782-5348)
In Maricopa County (602) 263-1100

REVISION	DATE

Kimley»Horn
© 2019 KIMLEY-HORN AND ASSOCIATES, INC.
7740 North 16th Street, Suite 300
Phoenix, Arizona 85020 (602) 944-5500

Registered Professional Engineer (Civil)
CERTIFICATE NO. 32330
MICHAEL NORBY
Date Signed 08-14-19
ARIZONA, U.S.A.
Expires 06/31/2020

SCALE (H): 1"=300'
SCALE (V): N/A
DESIGNED BY: BLR
DRAWN BY: BLR
CHECKED BY: MAN
DATE: 05/03/19

COOLIDGE MUNICIPAL AIRPORT
CITY OF COOLIDGE
GROWTH MANAGEMENT
131 W PORTLET AVE
COOLIDGE, AZ 85228

COOLIDGE MUNICIPAL AIRPORT RECONSTRUCT RUNWAY 5-23 CONSTRUCTION PHASING PLAN PHASE 2

PROJECT NO. 191593007

DRAWING NAME 191593011CS.dwg

C2.2

SHEET NO. 8 OF 86